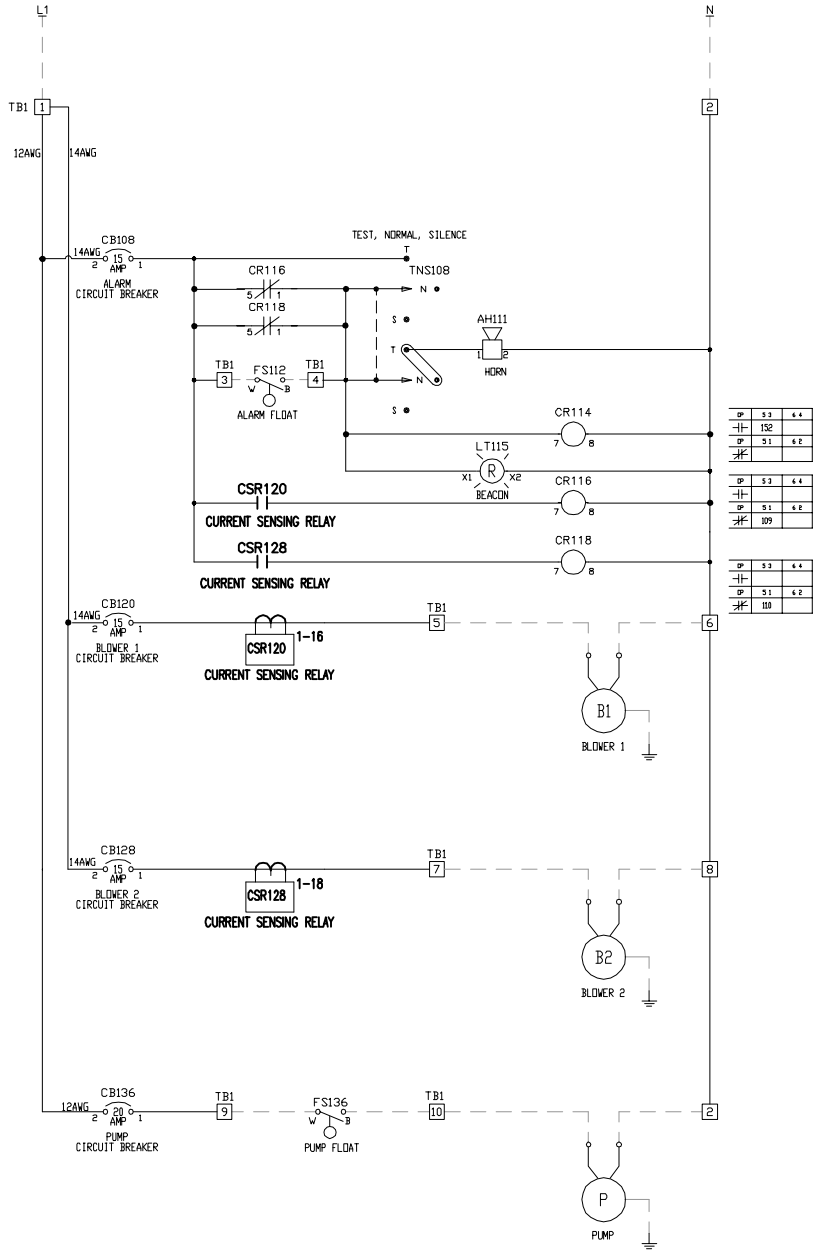

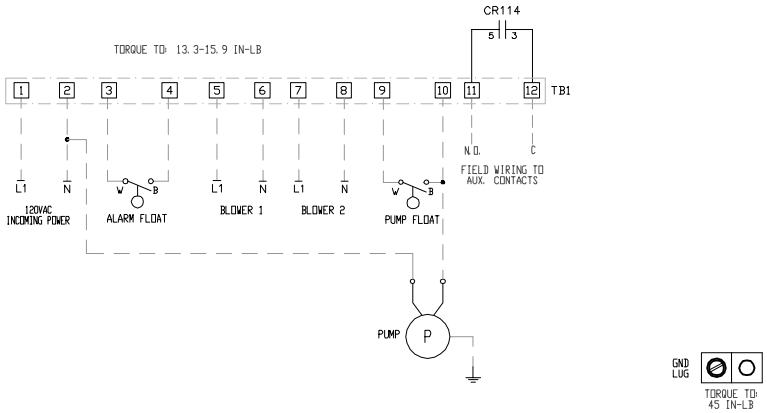

OVERLOAD PROTECTION, MAIN DISCONNECT AND OVERCURRENT PROTECTION OF INCOMING FEEDER CIRCUIT PROVIDED BY OTHERS AND MUST BE SIZED ACCORDING TO PUMP/MOTOR MANUFACTURING SPECIFICATIONS

EXTERNAL COMPONENTS (COMPRESSOR AND/OR PUMPS) PROVIDED BY OTHERS AND MUST BE U.L. APPROVED THERMALLY PROTECTED PUMPS

TEMPERATURE RATING OF FIELD INSTALLED CONDUCTORS MUST BE AT LEAST 140 DEG. F. (60 DEG. C.). TERMINAL STRIPS AND GROUND LUG USE COPPER CONDUCTORS ONLY.

CONNECT GROUND LUG IN PANEL TO A SECURE EARTH GROUND

DASHED LINES REPRESENT FIELD WIRING

FIELD WIRING SECTION

NOTICE: THIS DRAWING CONTAINS PROPRIETARY INFORMATION AND IT SHALL NOT BE USED OR REPRODUCED OR ITS CONTENTS DISCLOSED IN WHOLE OR IN PART, WITHOUT PRIOR WRITTEN CONSENT.

SJE-Rhombus

REV	ECO NO.	DATE	DRWN	APPD
A	C09484	6/18	JJ	

DRWN BY	DATE	CHKD BY	DATE	APPD BY	DATE
JJ	6/8/18	JJ	6/8/18	ACB	6/8/18

OEM NAME	OEM P/N	PAGE	SCALE	DWG SIZE
N/A	N/A	1 of 1	NONE	D

PROJECT NO.	QUOTE NO.	REV.
1059267	N/A	A

TITLE: LIT, RH, SCHEM MECH AER 2 BLOWERS W/AUX

REV CNTRL FOR: 1059267